PART #: LSA05

REVISIONS			
REV	DESCRIPTION	DATE	APPROVED

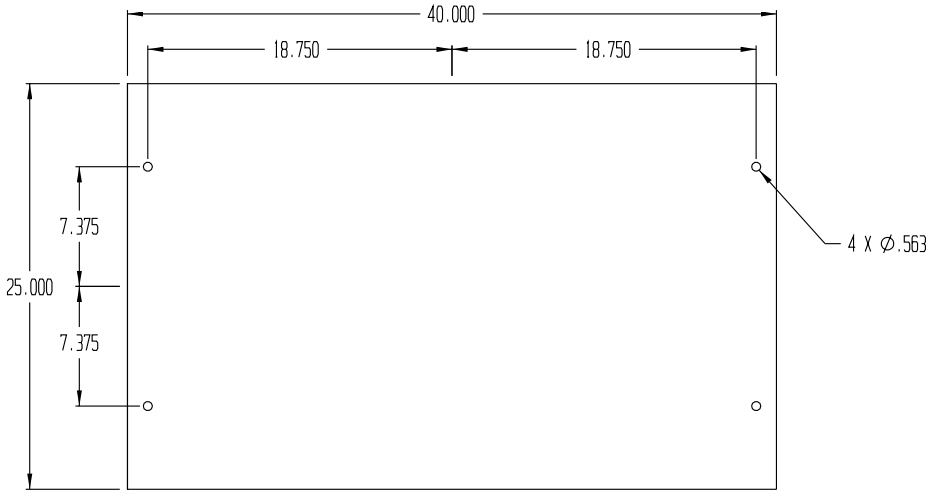

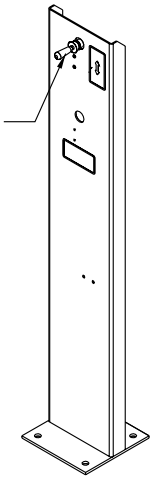

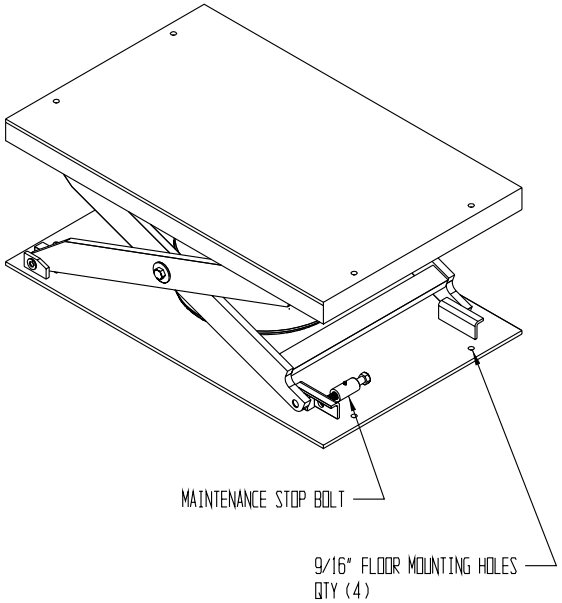

NOTES:
1) 12" HOSE SUPPLIED WITH LIFT
2) MINIMUM 1/2" AIR FEED REQUIRED

LIFT SPECIFICATIONS

CAPACITY:	3000 LBS
CONTROLLER:	HAND
CONTROLLER MOUNT:	PEDESTAL
INTERNAL VALVE:	NON - PILOTED EXHAUST
SAFETY FEATURES:	MAINTENANCE STOP BOLT PRESSURE RELIEF VALVE
SKIRT:	NONE
COLOR:	SAFETY ORANGE

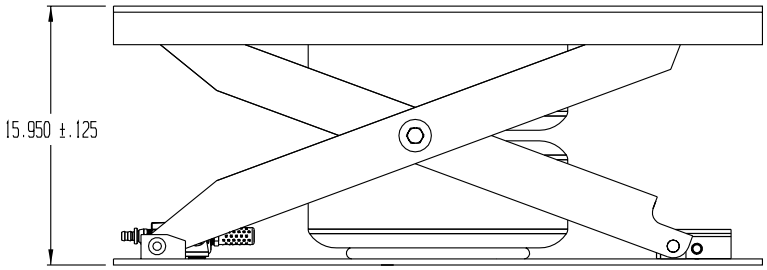

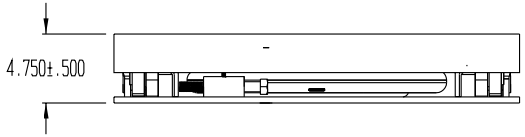

POS	PART#	MATERIAL#	DESCRIPTION	QTY	UNIT

TOLERANCES UNLESS OTHERWISE NOTED
.X ± .250
.XX ± .125
.XXX ± 0.030
.XXXX ± 0.0050
ANGLE ± 1°

Enkon Systems

2760 RIDGEWAY COURT ○ WALLED LAKE, MI. 48390-1662

TITLE: LSA05-30-16-2540

DRN: RA 1-15-10 | MATERIAL:

PART #: LSA05 | CHKD. BY: | DWG NO.: 02085698 | REV: | REF:

CONFIDENTIAL

THE INFORMATION CONTAINED ON THIS DRAWING IS BOTH CONFIDENTIAL AND PROPRIETARY. IT IS THE SOLE PROPERTY OF HERKULES EQUIPMENT CORPORATION. ANY REPRODUCTION IN PART OR AS A WHOLE WITHOUT THE WRITTEN PERMISSION OF HERKULES EQUIPMENT CORPORATION IS PROHIBITED AND MAY BE UNLAWFUL.